Town of Thomaston
Building Dept.
158 Main St.
Thomaston, CT 06787
(860) 283-2857

# CONSTRUCTION OF A DECK

2015 International Residential Code

## Zoning Information

A zoning application must be filled out and submitted with a plot plan showing where the deck will be located;

- Show locations of septic tank, leach fields, and well if applicable

  **(Separate approval will be required from Torrington Area Health District if you have well and/or septic before zoning can be approved. TAHD permits can be obtained in the Building and Land Use Office)**

- Stake out where the proposed deck will be located on your property.

## Building Information

2 sets of plans are required (one will be returned to you with any necessary corrections)

## SOME OF THESE SPECIFICATIONS MAY NOT APPLY TO ABOVE GROUND POOL DECKS

The information below is required to be on your building plan;

- Size of deck
- Stairs - tread depth 9" minimum CT Amendment (R311.7.5.2) and riser height 8¼" maximum CT Amendment (R311.7.5.1)
- Height of deck above the ground or grade
- Lag bolt deck to house - fastener spacing for ledger board - Figure 507.2.1(1)
- Deck attachment for lateral restraint - Figure 507.2.3
- Flashing over ledger
- Landing at base of stairs - width of stairs 3'

## INSPECTIONS REQUIRED:

- **Piers must be inspected before concrete is poured**
- **Deck is inspected upon completion**

SUGGESTED RECOMMENDATIONS FOR DECK JOIST SPANS (table R507.5)

- #2 Spruce pine fir, Douglas fir, Live load - 40 psi, Dead load - 10 psi

| Joist Size | Maximum Joist Spacing (inches) 16" 0.C. | 24" 0.C. |
|---|---|---|
| 2" x 6" | 8' 8" | 7' 2" |
| 2" x 8" | 11' 1" | 9' 1" |
| 2" x 10" | 13' 7" | 11' 1" |
| 2" x 12" | 15' 9" | 12' 10" |

| Maximum Height | Deck Post Size |
|---|---|
| Up to 8' | 4" x 4" post or 4" x 6" post |
| Up to 14' | 6" x 6" post |

* Measured to Underside of Beam

| | Deck Joist Maximum Span (feet) | | | |
|---|---|---|---|---|
| Beam Size | 8 | 10 | 12 | 16 |
| (2) 2" x 6" | 4' 8" | 4' 2" | 3' 10" | 3' 1" |
| (2) 2" x 8" | 5' 11" | 5' 4" | 4' 10" | 4' 1" |
| (2) 2" x 10" | 7' 3" | 6' 6" | 5' 11" | 5' 1" |
| (2) 2" x 12" | 8' 5" | 7' 6" | 6' 10" | 5' 11" |
| (3) 2" x 12" | 12' 1" | 10' 9" | 9' 10" | 8' 6" |

* Beams larger than 4" x 12" need engineered design

Lag bolting schedule for decks band not including regular nailing schedule with ½" sheathing

| Joist Span | 6' | 7' | 8' | 9' | 10' | 11' | 12' | 13' | 14' | 15' | 16'1" – 18' |
|---|---|---|---|---|---|---|---|---|---|---|---|
| Bolt Size | 1/2" | 1/2" | 1/2" | 1/2" | 1/2" | 1/2" | 1/2" | 1/2" | 1/2" | 1/2" | 1/2" |
| Bolt Spacing | 30" | 23" | 23" | 18" | 18" | 15" | 15" | 13" | 13" | 11" | 10" |

## TABLE R507.2
## DECK LEDGER CONNECTION TO BAND JOIST[a, b]
(Deck live load = 40 psf, deck dead load = 10 psf, snow load ≤ 40 psf)

| CONNECTION DETAILS | JOIST SPAN | | | | | | |
|---|---|---|---|---|---|---|---|
| | 6′ and less | 6′1″ to 8′ | 8′1″ to 10′ | 10′1″ to 12′ | 12′1″ to 14′ | 14′1″ to 16′ | 16′1″ to 18′ |
| | On-center spacing of fasteners | | | | | | |
| $^1/_2$-inch diameter lag screw with $^1/_2$-inch maximum sheathing[c, d] | 30 | 23 | 18 | 15 | 13 | 11 | 10 |
| $^1/_2$-inch diameter bolt with $^1/_2$-inch maximum sheathing[d] | 36 | 36 | 34 | 29 | 24 | 21 | 19 |
| $^1/_2$-inch diameter bolt with 1-inch maximum sheathing[e] | 36 | 36 | 29 | 24 | 21 | 18 | 16 |

For SI: 1 inch = 25.4 mm, 1 foot = 304.8 mm, 1 pound per square foot = 0.0479 kPa.

a. Ledgers shall be flashed in accordance with Section R703.8 to prevent water from contacting the house band joist.

b. Snow load shall not be assumed to act concurrently with live load.

c. The tip of the lag screw shall fully extend beyond the inside face of the band joist.

d. Sheathing shall be wood structural panel or solid sawn lumber.

e. Sheathing shall be permitted to be wood structural panel, gypsum board, fiberboard, lumber or foam sheathing. Up to $^1/_2$-inch thickness of stacked washers shall be permitted to substitute for up to $^1/_2$ inch of allowable sheathing thickness where combined with wood structural panel or lumber sheathing.

## TABLE 507.2.1
## PLACEMENT OF LAG SCREWS AND BOLTS IN DECK LEDGERS AND BAND JOISTS

| MINIMUM END AND EDGE DISTANCES AND SPACING BETWEEN ROWS | | | | |
|---|---|---|---|---|
| | TOP EDGE | BOTTOM EDGE | ENDS | ROW SPACING |
| Ledger[a] | 2 inches[d] | $^3/_4$ inch | 2 inches[b] | $1^5/_8$ inches[b] |
| Band Joist[c] | $^3/_4$ inch | 2 inches | 2 inches[b] | $1^5/_8$ inches[b] |

For SI: 1 inch = 25.4 mm.

a. Lag screws or bolts shall be staggered from the top to the bottom along the horizontal run of the deck ledger in accordance with Figure R507.2.1(1).

b. Maximum 5 inches.

c. For engineered rim joists, the manufacturer's recommendations shall govern.

d. The minimum distance from bottom row of lag screws or bolts to the top edge of the ledger shall be in accordance with Figure R507.2.1(1).

## TABLE R507.4
## MAXIMUM JOIST SPACING

| MATERIAL TYPE AND NOMINAL SIZE | MAXIMUM ON-CENTER JOIST SPACING | |
|---|---|---|
| | Perpendicular to joist | Diagonal to joist[a] |
| $1^1/_4$-inch-thick wood | 16 inches | 12 inches |
| 2-inch-thick wood | 24 inches | 16 inches |
| Plastic composite | In accordance with Section R507.3 | In accordance with Section R507.3 |

For SI: 1 inch = 25.4 mm, 1 foot = 304.8 mm, 1 degree = 0.01745 rad.

a. Maximum angle of 45 degrees from perpendicular for wood deck boards

## TABLE R507.5
## DECK JOIST SPANS FOR COMMON LUMBER SPECIES[f] (ft. - in.)

| SPECIES[a] | SIZE | SPACING OF DECK JOISTS WITH NO CANTILEVER[b] (inches) | | | SPACING OF DECK JOISTS WITH CANTILEVERS[c] (inches) | | |
|---|---|---|---|---|---|---|---|
| | | 12 | 16 | 24 | 12 | 16 | 24 |
| Southern pine | 2 × 6 | 9-11 | 9-0 | 7-7 | 6-8 | 6-8 | 6-8 |
| | 2 × 8 | 13-1 | 11-10 | 9-8 | 10-1 | 10-1 | 9-8 |
| | 2 × 10 | 16-2 | 14-0 | 11-5 | 14-6 | 14-0 | 11-5 |
| | 2 × 12 | 18-0 | 16-6 | 13-6 | 18-0 | 16-6 | 13-6 |
| Douglas fir-larch[d], hem-fir[d] spruce-pine-fir[d] | 2 × 6 | 9-6 | 8-8 | 7-2 | 6-3 | 6-3 | 6-3 |
| | 2 × 8 | 12-6 | 11-1 | 9-1 | 9-5 | 9-5 | 9-1 |
| | 2 × 10 | 15-8 | 13-7 | 11-1 | 13-7 | 13-7 | 11-1 |
| | 2 × 12 | 18-0 | 15-9 | 12-10 | 18-0 | 15-9 | 12-10 |
| Redwood, western cedars, ponderosa pine[e], red pine[e] | 2 × 6 | 8-10 | 8-0 | 7-0 | 5-7 | 5-7 | 5-7 |
| | 2 × 8 | 11-8 | 10-7 | 8-8 | 8-6 | 8-6 | 8-6 |
| | 2 × 10 | 14-11 | 13-0 | 10-7 | 12-3 | 12-3 | 10-7 |
| | 2 × 12 | 17-5 | 15-1 | 12-4 | 16-5 | 15-1 | 12-4 |

For SI: 1 inch = 25.4 mm, 1 foot = 304.8 mm, 1 pound per square foot = 0.0479 kPa, 1 pound = 0.454 kg.

a. No. 2 grade with wet service factor.

b. Ground snow load, live load = 40 psf, dead load = 10 psf, $L/\Delta = 360$.

c. Ground snow load, live load = 40 psf, dead load = 10 psf, $L/\Delta = 360$ at main span, $L/\Delta = 180$ at cantilever with a 220-pound point load applied to end.

d. Includes incising factor.

e. Northern species with no incising factor

f. Cantilevered spans not exceeding the nominal depth of the joist are permitted.

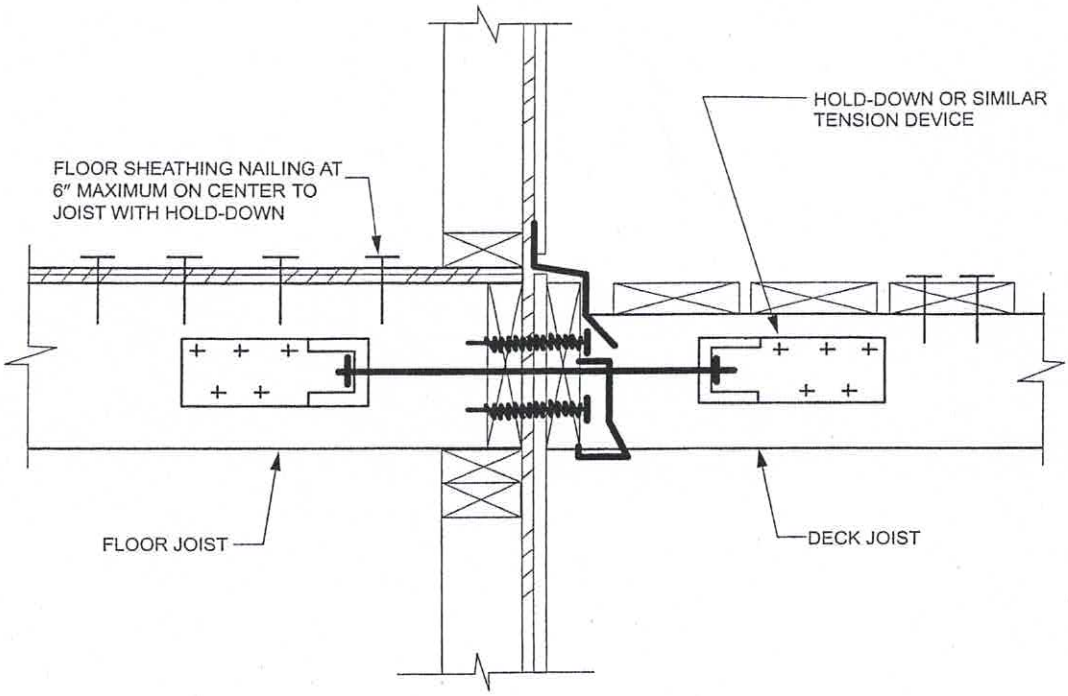


For SI: 1 inch = 25.4 mm.

**FIGURE 507.2.3(1)**
**DECK ATTACHMENT FOR LATERAL LOADS**

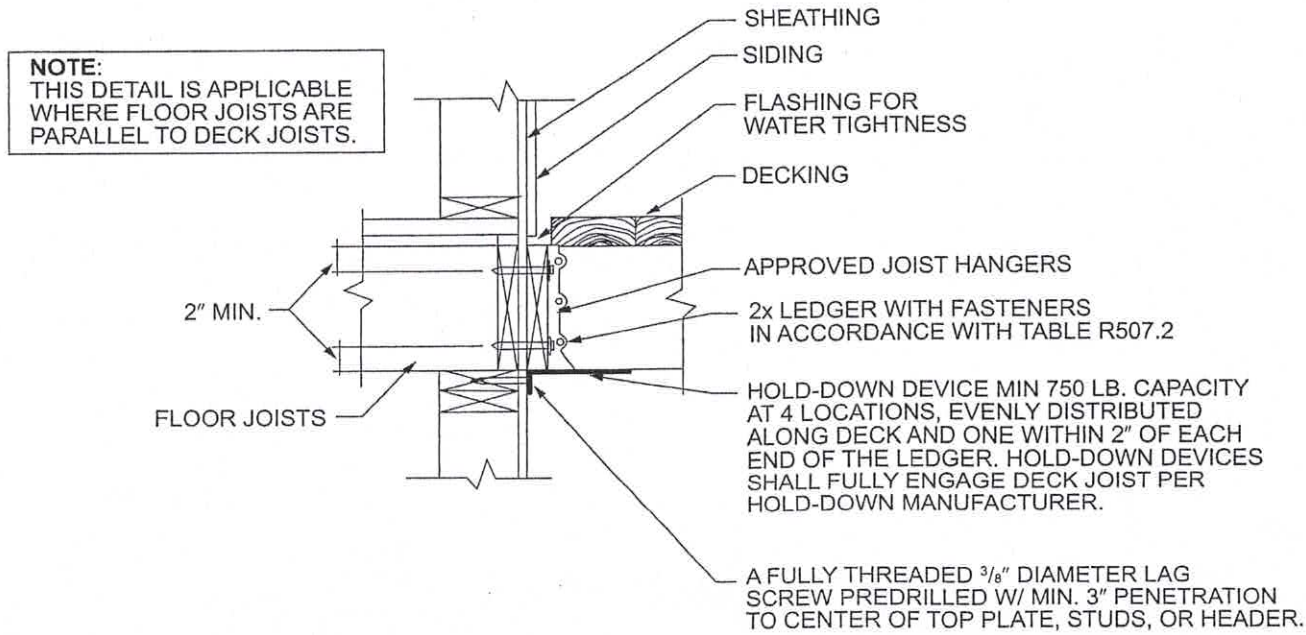


For SI: 1 inch = 25.4 mm, 1 foot = 304.8 mm.

**FIGURE R507.2.3(2)**
**DECK ATTACHMENT FOR LATERAL LOADS**

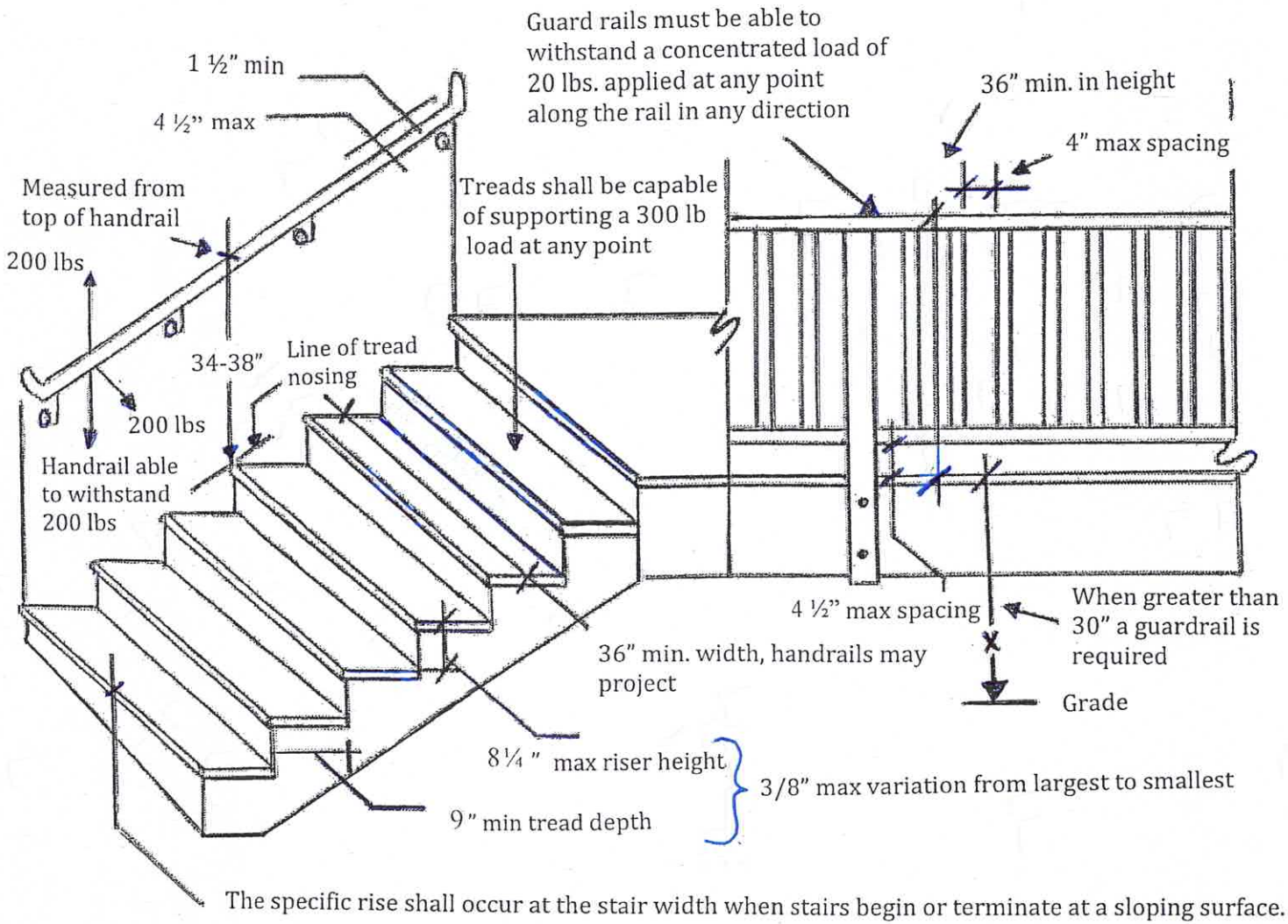


BASED ON 2015 INTERNATIONAL RESIDENTIAL CODE